VT-658

DARVEEN

8.4" Windows Vehicle Mount Computer with Intel® Celeron® Processor

Overview

The VT-658 is a ruggedized vehicle-mounted computer powered by an Intel® Celeron® processor and built with an 8.4-inch industrial resistive touchscreen. It offers the choices of Windows-based OS, ensuring compatibility with most applications and optimizing network management systems. The VESA 75 and 100 mounts make installation in forklifts, cranes, trucks easy, while flexible WiFi, Bluetooth, 4G LTE/5G, GNSS, and CAN2.0B expansion options ensure always connected. Furthermore, it has an 8 to 36V wide-range DC input with power ignition function, allowing it to adapt to different power systems. It complies with the MIL-STD-810G military standards for shock and vibration resistance, and it is IP65 rated for protection against dust and water, ensuring its reliability in challenging environments.

Features

- 8.4" TFT-LCD with resistive touchscreen
- Rugged aluminum enclosure and fanless design
- IP65 protection against water and dust
- Compliant with MIL-STD-810G vibration testing standards
- Wide range 8-36VDC power input with ignition control
- Flexible expansion capability for Wi-Fi 6, Bluetooth 5.3, LTE, 5G, GPS, CAN2.0B



I/O Interfaces



Sistemi Avanzati Elettronici S.r.l.
Via Marconi, 11D - 13836 Cossato (BI)
+39 015 983206 | info@sisav.it | www.sisav.it

VT-658

DARVEEN

Specifications

Display	
Size	8.4 inch (4:3)
Touch Type	5-wire resis?ve touch
Display Type	TFT LCD
Resolu?on	800 x 600
Luminance	450 nits
Contrast Ra?o	600: 1
View Angles	80 (leD), 80 (right), 80 (up), 60 (down)
Color	16.2M
System	
CPU	Intel® Celeron® J1900 processor (quad core, 2.0 GHz)
Chipset	Intel® Atom® and Celeron® Processor SoC
Memory	4GB DDR3L-1333 SO-DIMM (up to 8GB)
Storage	128GB mSATA SSD(up to 512GB)
Graphics	Intel® HD Graphics
BIOS	SPI BIOS
Keypad & Keyboard	
Keypad	Power on/off Brightness adjustment
I/O Ports	
USB	1x USB 2.0 (Type A) 1x USB 3.0 (Type A)
Serial	1x RS-232/422/485 (COM1 supports 5V/12V, DB9) 1x RS-232 (COM2 supports 5V, DB9)
Ethernet	1x GbE LAN
SIM Card Slot	1x Nano SIM socket
DIO	4x DI + 2x DO (op?onal, with 3.3V, replace COM2 port)
CAN bus	2x CAN2.0B (op?onal, supports J1939 protocol, compa?ble-layout with COM2 port)
Antenna	2-4x TNC connector for external antenna (Wi-Fi, Bluetooth, WWAN, GPS)
RF Communication	
Wi-Fi	Wi-Fi 5: 802.11a/b/g/n/ac, 2.4G/5G (op?onal) Wi-Fi 6E: 802.11a/b/g/n/ac/ax, 2.4G/5G (op?onal)
Cellular	4G, LTE (op?onal) 5G, NSA/SA (op?onal)
Bluetooth	Bluetooth 4.0/5.3 (op?onal)
GNSS	GPS, GLONASS, Galileo, BeiDou (op?onal, Ublo x NEO M8N)
Audio	
Speaker	8Ω/2W, mono speaker
Power	
DC Input	8 to 36VDC
Power Consump?on	12W (Typ.)
Igni?on On/Off	Power on delay, default 10 seconds Power off delay, default 10 seconds (On/Off delay ?me can be changed via BIOS seKng)
Ba@ery	7.2V 3350mAh (op?onal)
Power Mode	ATX (default), AT
Operating System	
Windows	Windows 10 IoT Enterprise LTSC Windows 10 Pro

Sistemi Avanzati Elettronici S.r.l.
Via Marconi, 11D - 13836 Cossato (BI)
+39 015 983206 | info@sisav.it | www.sisav.it

VT-658

Mechanical	
Dimensions (W x D x H)	240 x 190 x 59 mm (9.45 x 7.48 x 2.32 inches)
Weight (N.W.)	1.8 kg (3.96 lbs)
Moun?ng Mode	VESA75 and 100
Material	Die-cas?ng aluminum with heavy duty metal
Environment	
Opera?ng Temperature	-20 to 60°C (-4 to 140°F)
Storage Temperature	-40 to 70°C (-40 to 158°F)
Rela?ve Humidity	95% @70°C (158°F), non-condensing
Shock	MIL-STD-810G Method 516.6 Procedure I
Vibra?on	MIL-STD-810G Method 514.6 Procedure I
IP Ra?ng	IP65 compliant (I/O interface must be closed)
Certification	
EMC	CE, FCC

Dimensions

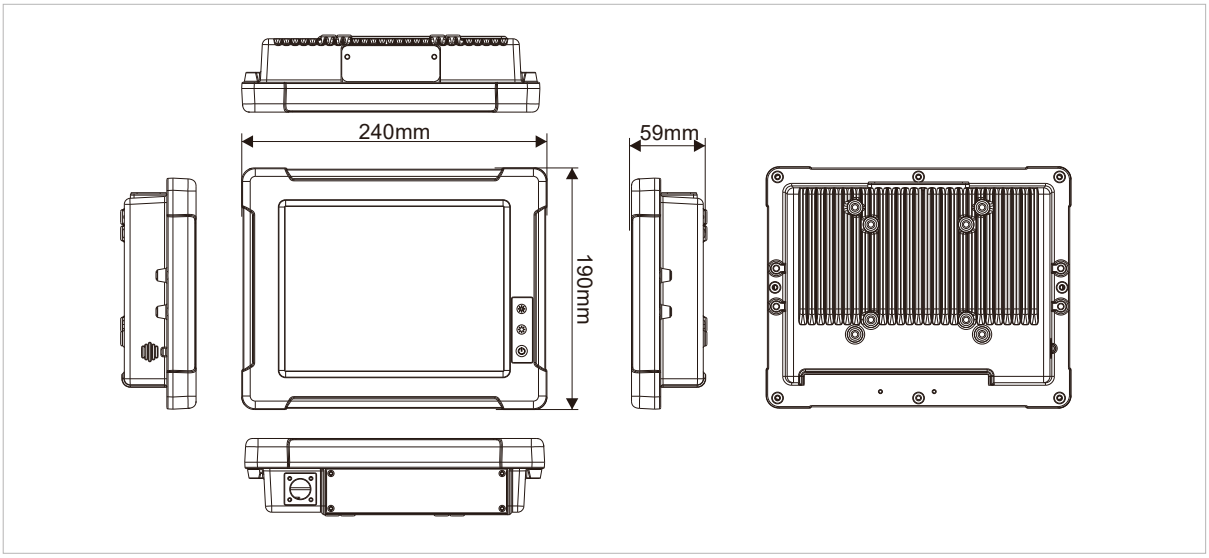

Optional Accessories

Part No.	Description
PWR836D512-M12	8 to 36VDC Input, 5V/12VDC Output, M12 connector

Ordering Information

Part No.	Description
VT-658-C105A-A001	VT-658 with Intel® Celeron® J1900, 8.4" resistive touchscreen LCD, 4GB RAM(Apacer), 128GB mSATA(HIK), WiFi(PE15N), TNC (L)-WiFi_M, TNC (R)-WiFi_A

Sistemi Avanzati Elettronici S.r.l.
Via Marconi, 11D - 13836 Cossato (BI)
+39 015 983206 | info@sisav.it | www.sisav.it