# VT-708K

DARVEEN

10.1" Windows Vehicle Mount Computer with Intel® Celeron® Processor

## Overview

The VT-708K is a ruggedized vehicle-mounted computer powered by an Intel® Celeron® processor, featuring a 10.1-inch industrial resistive touchscreen with brightness up to 1,000 nits and an integrated QWERTY keyboard. It offers the choices of Windows-based OS, ensuring compatibility with most applications and optimizing network management systems. The VESA 75 and 100 mounts make installation in forklifts, cranes, trucks easy, while flexible WiFi 6E, Bluetooth V5.3, 4G LTE/5G, GNSS, and CAN2.0B expansion options ensure always connected. Furthermore, it has an 8 to 36V wide-range DC input with power ignition function, allowing it to adapt to different power systems. It complies with the MIL-STD-810G military standards for shock and vibration resistance, and it is IP65 rated for protection against dust and water, ensuring its reliability in challenging environments.

## Features

- 10.1" TFT-LCD with resistive touch screen
- Integrated QWERTY keyboard
- Rugged aluminum enclosure and fanless design
- IP65 protection against water and dust
- Compliant with MIL-STD-810G vibration testing standards
- Wide range 8-36VDC power input with ignition control
- Flexible expansion capability for Wi-Fi 6, Bluetooth 5.3, LTE, 5G, GPS, CAN2.0B




## I/O Interfaces

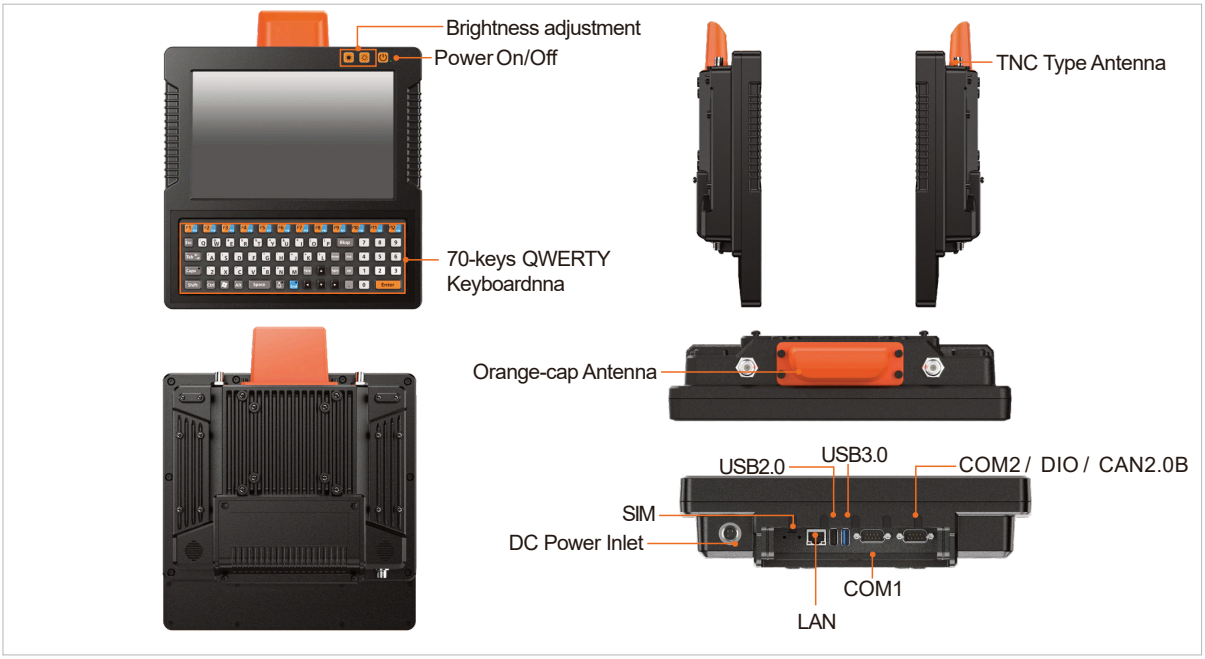




**Sistemi Avanzati Elettronici S.r.l.**
Via Marconi, 11D - 13836 Cossato (BI)
+39 015 983206 | info@sisav.it | www.sisav.it

SisAv
TECHNOLOGY TOGETHER

# VT-708K

DARVEEN

## Specifications

| | |
|---|---|
| Display | |
| Size | 10.1 inch (16:10) |
| Touch Type | 5-wire resisBvetouch |
| Display Type | TFT LCD |
| ResoluBon | 1280 x 800 |
| Luminance | 1000 nits |
| Contrast RaBo | 900: 1 |
| View Angles | 85 (leH), 85 (right), 85 (up), 85 (down) |
| Color | 16.7M |
| System | |
| CPU | Intel® Celeron® J1900 processor (quad core, 2.0 GHz) |
| Chipset | Intel® Atom® and Celeron® Processor SoC |
| Memory | 4GB DDR3L-1333 SO-DIMM (up to 8GB) |
| Storage | 128GB mSATA SSD(up to 512GB) |
| Graphics | Intel® HD Graphics |
| BIOS | SPI BIOS |
| Keypad & Keyboard | |
| Keypad | Power on/off<br>Brightness adjustment, Power LED indicator |
| Keyboard | 70-keys QWERTY Keyboard<br>F1-F24 FuncBon Keys, 0-9 Number and A-Z Alpha Keys<br>All Keys LED Backlight, Independent Switch Control, Day and Night Mode |
| I/O Ports | |
| USB | 1x USB 2.0 (Type A)<br>1x USB 3.0 (Type A) |
| Serial | 1x RS-232/422/485 (COM1 supports 5V/12V, DB9)<br>1x RS-232 (COM2 supports 5V, DB9) |
| Ethernet | 1x GbE LAN |
| SIM Card Slot | 1x Nano SIM socket |
| DIO | 4x DI + 2x DO (opBonal,with 3.3V, replace COM2 port) |
| CAN bus | 2x CAN2.0B (opBonal,supports J1939 protocol, compaBble-layout with COM2 port) |
| Antenna | 2-4x TNC connector for external antenna (Wi-Fi, Bluetooth, WWAN, GPS) |
| RF Communication | |
| Wi-Fi | Wi-Fi 5: 802.11a/b/g/n/ac, 2.4G/5G (opBonal)<br>Wi-Fi 6E: 802.11a/b/g/n/ac/ax, 2.4G/5G (opBonal) |
| Cellular | 4G, LTE (opBonal)<br>5G, NSA/SA (opBonal) |
| Bluetooth | Bluetooth 4.0/5.3 (opBonal) |
| GNSS | GPS,GLONASS,Galileo, BeiDou (opBonal, Ublo x NEO M8N) |
| Audio | |
| Speaker | 8Ω/2W, mono speaker |
| Power | |
| DC Input | 8 to 36VDC |
| Power ConsumpBon | 18W (Typ.) |
| IgniBon On/Off | Power on delay, default 10 seconds<br>Power off delay, default 10 seconds<br>(on/off delay Bme can be changed via BIOS seOng) |
| BaCery | 7.2V 3350mAh (opBonal) |
| Power Mode | ATX (default), AT |
| Operating System | |
| Windows | Windows 10 IoT Enterprise LTSC<br>Windows 10 Pro |



Sistemi Avanzati Elettronici S.r.l.
Via Marconi, 11D - 13836 Cossato (BI)
+39 015 983206 | info@sisav.it | www.sisav.it

# VT-708K

| | |
|---|---|
| Mechanical | |
| Dimensions (W x D x H) | 280 x 285 x 73 mm (11.02 x 11.22 x 2.87 inches) |
| Weight (N.W.) | 3.8 kg (8.38 lbs) |
| MounBng Mode | VESA75 and 100 |
| Material | Die-casBng aluminum with heavy duty metal |
| Environment | |
| OperaBng Temperature | -20 to 60°C (-4 to 140°F) |
| Storage Temperature | -40 to 70°C (-40 to 158°F) |
| RelaBveHumidity | 95% @70°C (158°F), non-condensing |
| Shock | MIL-STD-810G Method 516.6 Procedure I |
| VibraBon | MIL-STD-810G Method 514.6 Procedure I |
| IP RaBng | IP65 compliant (I/O interface must be closed) |
| Certification | |
| EMC | CE, FCC |

## Dimensions

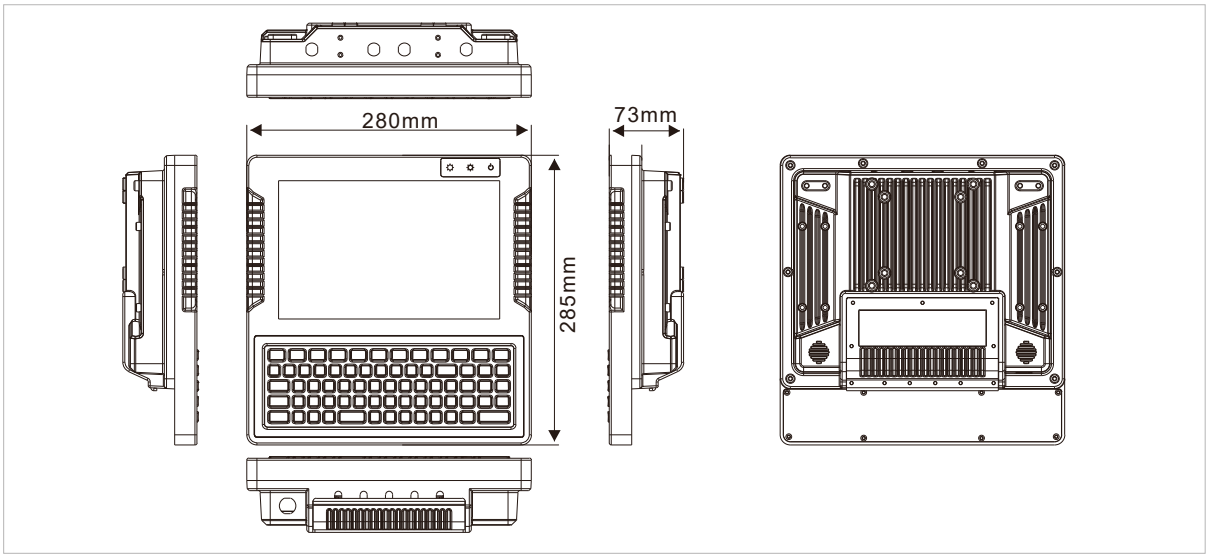


## Optional Accessories

| Part No. | Description |
|---|---|
| PWR836D512-M12 | 8 to 36VDC Input, 5V/12VDC Output, M12 connector |

## Ordering Information

| Part No. | Description |
|---|---|
| VT-708K-CO05L-A001 | VT-708K(BT30) with Intel® Celeron® J1900, 10.1" resistive touchscreen LCD, 4GB RAM(Apacer), 128GB mSATA(HIK), WiFi5(AW-CM251), BT(AW-CM251), 4G(EC20),TNC(L)-WiFi_M, TNC(M1)-Bluetooth, TNC(M2)-4G_M |
| VT-708K-C505B-A001 | VT-708K(BT30) with Intel® Celeron® J1900, 10.1" resistive touchscreen LCD, 4GB RAM(Apacer), 128GB mSATA(HIK), WiFi5(AW-CM251), BT(AW-CM251), TNC(L)-WiFi_M, TNC(R)-Bluetooth |



Sistemi Avanzati Elettronici S.r.l.
Via Marconi, 11D - 13836 Cossato (BI)
+39 015 983206 | info@sisav.it | www.sisav.it