VT-776W

DARVEEN

10.1" Windows Vehicle Mount Computer with Intel® Celeron J6412 Processor

Overview

VT-776W is the latest generation of ruggedized vehicle mounted computer that comes with Intel Celeron J6412 platform processor and Windows 11 operating system. The VT-776W harnesses full Microsoft® Windows® computing power in a mobile environment, optimizing application and network management compatibility, while remaining flexible enough to run multiple advanced applications.

VT-776W assembly 10.1-inch industrial resistive/capacitive touch screen, built-in WiFi6E, Bluetooth5.3, 4G LTE / 5G, GPS/GNSS/Beidou, 8~36V wide-range DC input adapt it to the warehousing forklift, logistics, container trucks and so on. Meet the STD-MIL-810H of anti-shock and vibration, IP66 dust and water proof standard make it operaing freely in the most demanding environment.

Features

- 10.1" TFT-LCD with resistive touch/projective capacitive touch screen
- Front panel intergrated numeric and function keys control
- Rugged aluminum enclosure and fanless design
- IP66 protection against water and dust
- MIL-STD-810H vibration testing standards compliant
- Wide range 8-36VDC power input with ignition control
- Flexible expansion capability for Wi-Fi 6E, Bluetooth 5.3, LTE, 5G, GNSS, CAN2.0B



I/O Interfaces



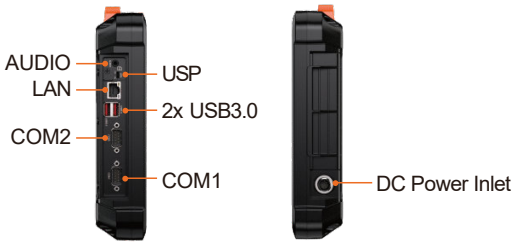

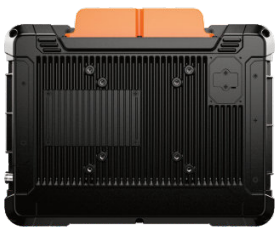

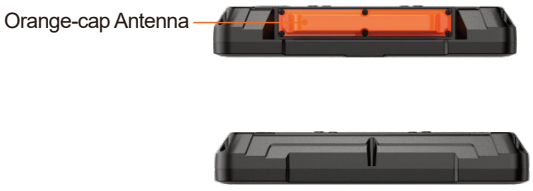

Sistemi Avanzati Elettronici S.r.l.
Via Marconi, 11D - 13836 Cossato (BI)
+39 015 983206 | info@sisav.it | www.sisav.it

VT-776W

DARVEEN

Specifications

Display	
Size	10.1 inch (16:10)
Touch Type	Projected capaciCvemulC touch, 5-wire resisCvetouch (OpConal, by request)
Display Type	TFT LCD
ResoluCon	1920 x 1200
Luminance	1000 nits
Contrast RaCo	1000: 1
View Angles	85 (leJ), 85 (right), 85 (up), 85 (down)
Color	16.2M
System	
CPU	Intel® Celeron J6412, quad core (2.0GHz)
Chipset	11th Gen Intel® Tiger Lake-UP3 PlaKorm
Memory	4GB DDR4-2666 SO-DIMM (upto 32GB)
Storage	256GB M.2 SSD (up to 1TB)
Graphics	Intel® Iris® Xe Graphics
BIOS	AMI UEFI BIOS
Keypad & Keyboard	
Keyboard	Power on/off Brightness and volume adjustment F1-F6 user-defined funcCon keys Power LED indicator
I/O Ports	
USB	2x USB 3.0 (Type A)
Serial	1x RS-232/422/485 (COM1 supports 5V/12V, DB9) 1x RS-232 (COM2 supports 5V, DB9)
Ethernet	1x GbE LAN (RJ45)
Display	3.5mm Audio Jack (Mic-in/Line-out)
SIM Card Slot	1x SIM Socket
Antenna	2~8x TNC connector for external antenna (Wi-Fi, Bluetooth, WWAN, GPS)
RF Communication	
Wi-Fi	Wi-Fi 6E: 802.11a/b/g/n/ac/ax, 2.4G/5G/6G (opConal) Wi-Fi 7: 802.11a/b/g/n/ac/ax/be, 2.4G/5G/6G (opConal)
Cellular	4G, LTE (opConal) 5G, NSA/SA (opConal)
Bluetooth	Bluetooth 5.3 (dependson Wi-Fi 6E, opConal) Bluetooth 5.4 (dependson Wi-Fi 7, opConal)
GNSS	GPS, GLONASS, Galileo, BeiDou (opConal, Ublox NEO M8N)
Audio	
Speaker	8Ω/2W, dual studio speakers
Power	
DC Input	8~36VDC
Power ConsumpCon	18W (Typ.)
IgniCon On/Off	Power on delay, default 10 seconds Power off delay, default 10 seconds, (On/Off delay Cme can be changed via BIOS seNng)
BaDery	7.2V 3350mAh (opConal)
Power Mode	ATX (default), AT
Operating System	
Windows	Windows 11 IoT Enterprise LTSC Windows 10 IoT Enterprise LTSC Windows 10 Pro Windows 11 Pro

Sistemi Avanzati Elettronici S.r.l.
Via Marconi, 11D - 13836 Cossato (BI)
+39 015 983206 | info@sisav.it | www.sisav.it

VT-776W

Mechanical	
Dimensions (W x D x H)	280 x 210 x 46 mm (11.02 x 8.27 x 1.81 inches)
Weight (N.W.)	2.2 kg (4.85 lbs)
MounCng Mode	VESA75 and 100
Material	Die-casCngAluminum with Heavy Duty Metal
Environment	
OperaCng Temperature	-30~60°C (-22~140°F)
Storage Temperature	-40~70°C (-40~158°F)
RelaCveHumidity	95% @70°C (158°F), non-condensing
Shock	MIL-STD-810H Method 514.8 Procedure I
VibraCon	MIL-STD-810H Method 516.8 Procedure I
IP RaCng	IP66 compliant
Certification	
EMC	CE, FCC

Dimensions

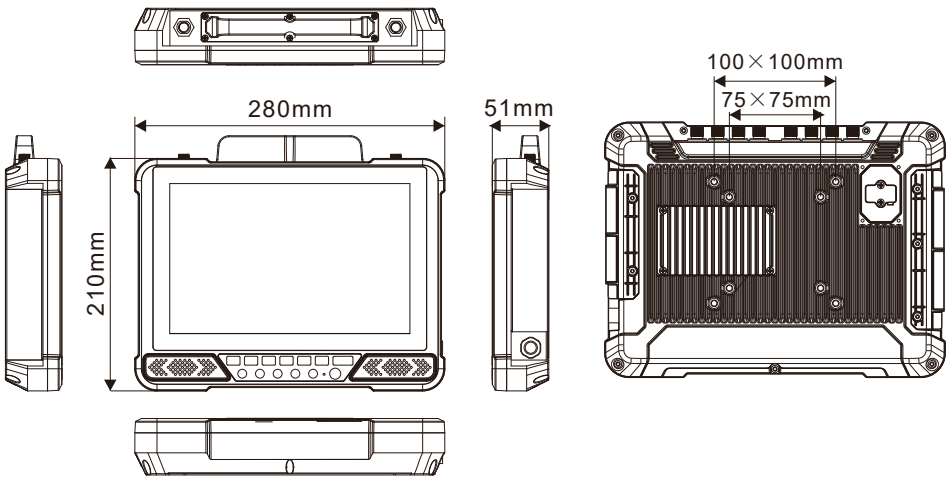

Optional Accessories

Part No.	Description
PWR836D512-M12	8-36VDC Input, 5V/12VDC Output, M12 connector

Ordering Information

Part No.	Description
VT-776W-C101A-A01	VT-776W + CTP(350nits)+ J6412 + 4GB RAM(HIK) + 128GB M.2(HIK) + WiFi6E(AX210) + Bluetooth(AX210) + TNC(1)-WiFi_M + TNC(2)-Bluetooth;

Update: January □,□□□□Email:sales@darveen.com
© Darveen Co.,Ltd. All rightsreserved. All specificationsand photosare subject to change without notice.

Sistemi Avanzati Elettronici S.r.l.
Via Marconi, 11D - 13836 Cossato (BI)
+39 015 983206 | info@sisav.it | www.sisav.it