VT-876

DARVEEN

12.1" Windows Vehicle Mount Computer with Intel® Celeron® J6412 Processor

Overview

The VT-876 is a rugged vehicle-mounted computer equipped with an Intel® Celeron® J6412 processor and Windows 11, delivering powerful computing capabilities in mobile settings. It features a 12.1-inch industrial touch screen, WiFi 7, Bluetooth 5.4, and 4G/5G connectivity, along with GNSS for precise location tracking. With a wide DC input of 8 to 36V, it's ideal for warehousing, logistics, and container transport. The VT-876 is built to withstand tough conditions, meeting MIL-STD-810H for shock and vibration resistance and IP66 for dust and water protection, ensuring reliable operation in the most demanding environments.

Features

- 12.1" TFT-LCD with resistive touch/projective capacitive touch screen
- Front panel intergrated numeric and function keys control
- Rugged aluminum enclosure and fanless design
- IP66 protection against water and dust
- MIL-STD-810H vibration testing standards compliant
- Wide range 8 to 36VDC power input with ignition control
- Flexible expansion capability for Wi-Fi 7, Bluetooth 5.4, LTE, 5G, GNSS, CAN2.0B



I/O Interfaces



Sistemi Avanzati Elettronici S.r.l.
Via Marconi, 11D - 13836 Cossato (BI)
+39 015 983206 | info@sisav.it | www.sisav.it

VT-876

DARVEEN

Specifications

Display	
Size	12.1 inch (4:3)
Touch Type	Projected capaciCve mulC touch, 5-wire resisCve touch (OpConal, by request)
Display Type	TFT LCD
ResoluCon	1024 x 768
Luminance	1000 nits
Contrast RaCo	1000: 1
View Angles	85 (leJ), 85 (right), 85 (up), 85 (down)
Color	16.7M
System	
CPU	Intel® Celeron® J6412, quad core (2.0GHz)
Chipset	Intel® Elkhart Lake PlaKorm
Memory	4GB DDR4-2666 SO-DIMM (up to 32GB)
Storage	128GB M.2 SSD (up to 2TB)
Graphics	Intel® Iris® Xe Graphics
BIOS	AMI UEFI BIOS
Keypad & Keyboard	
Keyboard	Power On/Off Brightness and volume adjustment 0-9 numeric, Enter and Backspace F1-F6 user-defined funcCon keys Power LED indicator
I/O Ports	
USB	2x USB 3.0 (Type A)
Serial	1x RS-232/422/485 (COM1 supports 5V/12V, DB9) 1x RS-232 (COM2 supports 5V, DB9)
Ethernet	1x GbE LAN (RJ45)
Audio	3.5mm Audio Jack (Mic-in/Line-out)
SIM Card Slot	1x SIM Socket
Antenna	2 to 8x TNC connector for external antenna (Wi-Fi, Bluetooth, WWAN, GPS)
RF Communication	
Wi-Fi	Wi-Fi 6E: 802.11a/b/g/n/ac/ax, 2.4G/5G/6G (opConal) Wi-Fi 7: 802.11a/b/g/n/ac/ax/be, 2.4G/5G/6G (opConal)
Cellular	4G, LTE (opConal) 5G, NSA/SA (opConal)
Bluetooth	Bluetooth 5.3 (Depends on Wi-Fi 6E, opConal) Bluetooth 5.4 (Depends on Wi-Fi 7, opConal)
GNSS	GPS, GLONASS, Galileo, BeiDou (opConal, Ublox NEO M8N)
Audio	
Speaker	8Ω/2W, dual studio speakers
Power	
DC Input	8 to 36VDC
Power ConsumpCon	18W (Typ.)
IgniCon On/Off	Power on delay, default 10 seconds Power off delay, default 10 seconds (On/Off delay Cme can be changed via BIOS seNng)
BaFery	7.2V 3350mAh (opConal)
Power Mode	ATX (default), AT
Operating System	
Windows	Windows 11 IoT Enterprise LTSC Windows 10 IoT Enterprise LTSC Windows 11 Pro Windows 10 Pro

Sistemi Avanzati Elettronici S.r.l.
Via Marconi, 11D - 13836 Cossato (BI)
+39 015 983206 | info@sisav.it | www.sisav.it

VT-876

Mechanical	
Dimensions (W x D x H)	300 x 260 x 58 mm (11.8 x 10.24 x 2.28 inches)
Weight (N.W.)	3.8 kg (8.4 lbs)
MounCng Mode	VESA75 and 100
Material	Die-casCngAluminum with Heavy Duty Metal
Environment	
OperaCng Temperature	-30 to 60°C (-22 to 140°F)
Storage Temperature	-40 to 70°C (-40 to 158°F)
RelaCveHumidity	95% @70°C (158°F), non-condensing
Shock	MIL-STD-810H Method 514.8 Procedure I
VibraCon	MIL-STD-810H Method 516.8 Procedure I
IP RaCng	IP66 compliant
Certification	
EMC	CE, FCC

Dimensions

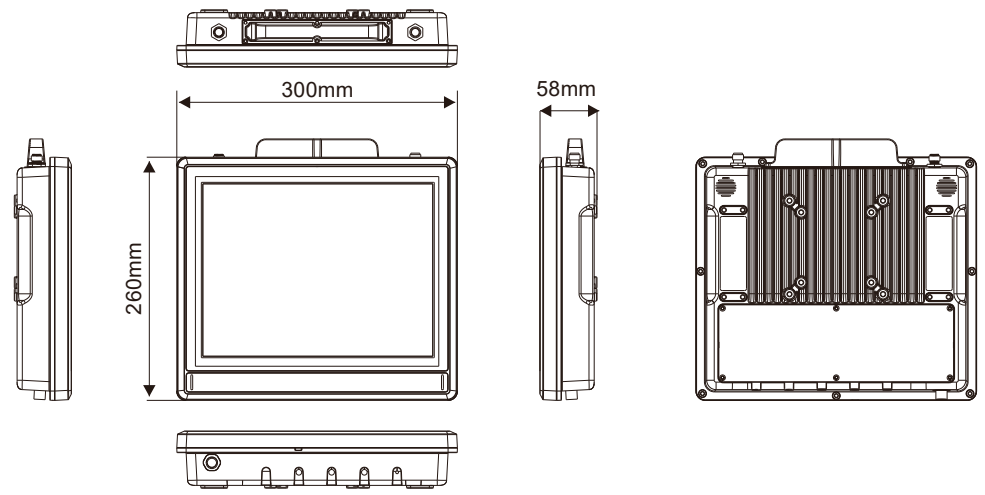

Optional Accessories

Part No.	Description
PWR836D512-M12	8 to 36VDC Input, 5V/12VDC Output, M12 connector

Ordering Information

Part No.	Description
VT-876-D401B-A01	VT-876 + CTP(1000)+ J6412 + 4GB RAM(HIK) + 128GB M.2(HIK) + WiFi6E(AX210) + Bluetooth(AX210) + 4G(EC20)+ GPS(UG-M80)+ TNC(1)-WiFi_M + TNC(2)-Bluetooth + TNC(3)-4G_M + TNC(8)-GPS;

Sistemi Avanzati Elettronici S.r.l.
Via Marconi, 11D - 13836 Cossato (BI)
+39 015 983206 | info@sisav.it | www.sisav.it