VT-976

DARVEEN

15" Windows Vehicle Mount Computer with Intel® Celeron® J6412 Processor

Overview

The VT-976 is a rugged vehicle-mounted computer powered by an Intel® Celeron® J6412 processor and equipped with Windows 11, delivering full Windows computing capabilities in mobile settings. It features a 15-inch industrial touch screen, WiFi 7, Bluetooth 5.4, 4G/5G connectivity, and GNSS support. With a versatile 8 to 36V DC input, it is ideal for warehousing, logistics, and container transport. Designed to withstand challenging environments, it meets MIL-STD-810H standards for anti-shock and vibration, as well as IP66 ratings for dust and water resistance.

Features

- 15" TFT-LCD with projective capacitive touch screen
- Front panel intergrated numeric and function keys control
- Rugged aluminum enclosure and fanless design
- IP66 protection against water and dust
- MIL-STD-810H vibration testing standards compliant
- Wide range 8 to 36VDC power input with ignition control
- Flexible expansion capability for Wi-Fi 7, Bluetooth 5.4, LTE, 5G, GNSS, CAN2.0B



I/O Interfaces

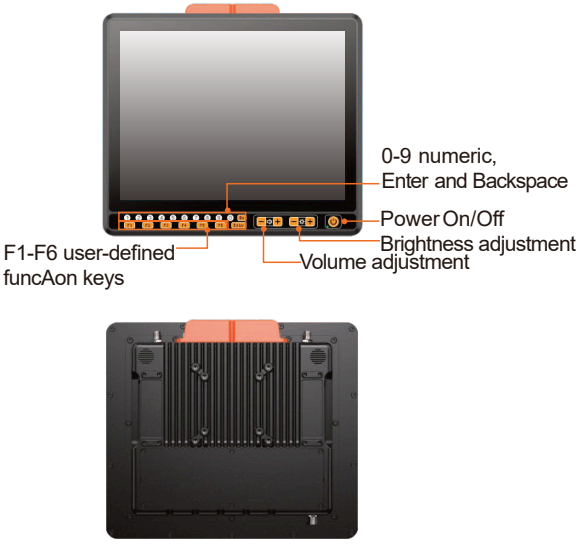

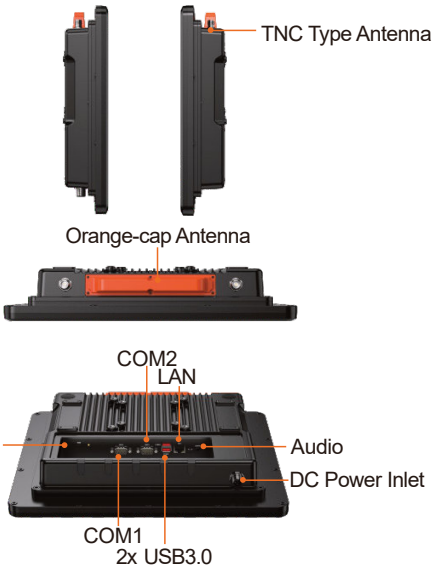

Sistemi Avanzati Elettronici S.r.l.
Via Marconi, 11D - 13836 Cossato (BI)
+39 015 983206 | info@sisav.it | www.sisav.it

VT-976

Specifications

Display	
Size	15 inch (4:3)
Touch Type	Projected capaciAve mulA touch
Display Type	TFT LCD
ResoluAon	1024 x 768
Luminance	1000 nits
Contrast RaAo	1000: 1
View Angles	89 (lel), 89 (right), 89 (up),89 (down)
Color	16.7M
System	
CPU	Intel® Celeron® J6412, quad core (2.0GHz)
Chipset	Intel® Elkhart Lake PlaJorm
Memory	4GB DDR4-2666 SO-DIMM (up to 32GB)
Storage	128GB M.2 SSD (up to 2TB)
Graphics	Intel® Iris®Xe Graphics
BIOS	AMI UEFI BIOS
Keypad & Keyboard	
Keyboard	Power On/Off Brightness and volume adjustment 0-9 numeric, Enter and Backspace F1-F6 user-defined funcAon keys Power LED indicator
I/O Ports	
USB	2x USB 3.0 (Type A)
Serial	1x RS-232/422/485 (COM1 supports 5V/12V, DB9) 1x RS-232 (COM2 supports 5V, DB9)
Ethernet	1x GbE LAN (RJ45)
Audio	3.5mm Audio Jack (Mic-in/Line-out)
SIM Card Slot	1x SIM Socket
Antenna	2 to 8x TNC connector for external antenna (Wi-Fi, Bluetooth, WWAN, GPS)
RF Communication	
Wi-Fi	Wi-Fi 6E: 802.11a/b/g/n/ac/ax, 2.4G/5G/6G (opAonal) Wi-Fi 7: 802.11a/b/g/n/ac/ax/be, 2.4G/5G/6G (opAonal)
Cellular	4G, LTE (opAonal) 5G, NSA/SA (opAonal)
Bluetooth	Bluetooth 5.3 (Depend on Wi-Fi 6E, opAonal) Bluetooth 5.4 (Depend on Wi-Fi 7, opAonal)
GNSS	GPS, GLONASS, Galileo, BeiDou (opAonal, Ublox NEO M8N)
Audio	
Speaker	8Ω/2W, dual studio speakers
Power	
DC Input	8 to 36VDC
Power ConsumpAon	22W (Typ.)
IgniAon On/Off	Power on delay, default 10 seconds Power off delay, default 10 seconds(On/Off delay Ame can be changed via BIOS seMng)
BaEery	7.2V 3350mAh (opAonal)
Power Mode	ATX (default), AT
Operating System	
Windows	Windows 11 IoT Enterprise LTSC Windows 10 IoT Enterprise LTSC Windows 11 Pro Windows 10 Pro

Sistemi Avanzati Elettronici S.r.l.
Via Marconi, 11D - 13836 Cossato (BI)
+39 015 983206 | info@sisav.it | www.sisav.it

VT-976

Mechanical	
Dimensions (W x D x H)	355 x 304 x 69 mm (13.97 x 11.96 x 2.71 inches)
Weight (N.W.)	4.8 kg (10.58 lbs)
MounAng Mode	VESA75 and 100
Material	Die-casAngAluminum with Heavy Duty Metal
Environment	
OperaAng Temperature	-30~60°C (-22~140°F)
Storage Temperature	-40~70°C (-40~158°F)
RelaAveHumidity	95% @70°C (158°F), non-condensing
Shock	MIL-STD-810H Method 514.8 Procedure I
VibraAon	MIL-STD-810H Method 516.8 Procedure I
IP RaAng	IP66 compliant
Certification	
EMC	CE, FCC

Dimensions

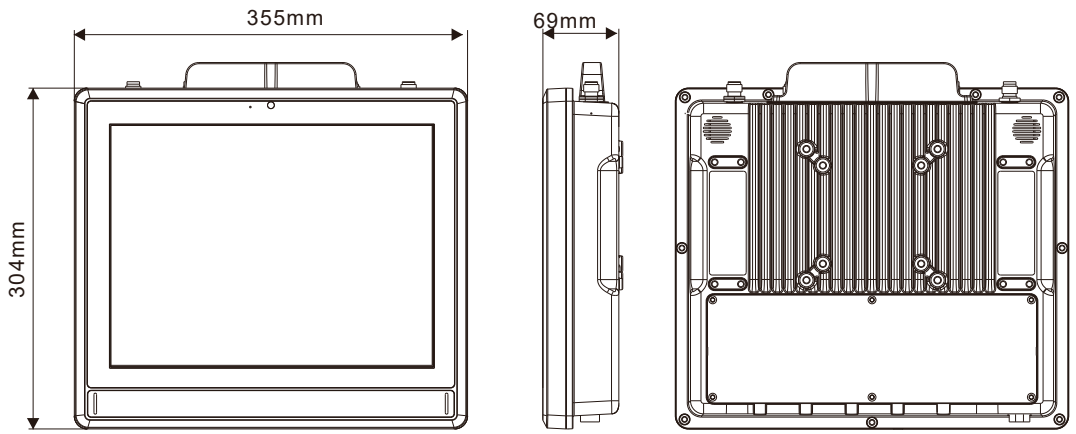

Optional Accessories

Part No.	Description
PWR836D512-M12	8-36VDC Input, 5V/12VDC Output, M12 connector

Ordering Information

Part No.	Description
VT-976-D401B-A01	VT-976 + CTP(1000)+ J6412 + 4GB RAM(HIK) + 128GB M.2(HIK) + WiFi6E(AX210) + Bluetooth(AX210) + 4G(EC20)+ GPS(UG-M80)+ TNC(1)-WiFi_M + TNC(2)-Bluetooth + TNC(3)-4G_M + TNC(8)-GPS;

Sistemi Avanzati Elettronici S.r.l.
Via Marconi, 11D - 13836 Cossato (BI)
+39 015 983206 | info@sisav.it | www.sisav.it