VT-979

DARVEEN

15" Windows Vehicle Mount Computer with Intel® 12th GEN Core-I Processor

Overview

The VT-979 is a ruggedized vehicle-mounted computer with an Intel Alder Lake platform processor and Windows 11 OS, offering full Windows computing power in a mobile environment. It features a 15-inch industrial touch screen, WiFi 7, Bluetooth 5.4, 4G/5G, GNSS, and 8 to 36V DC input, making it suitable for warehousing, logistics, and container trucks. It meets MIL-STD-810H for anti-shock/vibration and IP66 for dust/water resistance, allowing operation in demanding environments.

Features

- 15" TFT-LCD with resistive touch/projective capacitive touch screen
- Front panel intergrated numeric and function keys control
- Rugged aluminum enclosure and fanless design
- IP66 protection against water and dust
- MIL-STD-810H vibration testing standards compliant
- Wide range 8 to 36VDC power input with ignition control
- Flexible expansion capability for Wi-Fi 7, Bluetooth 5.4, LTE, 5G, GNSS, CAN2.0B



I/O Interfaces

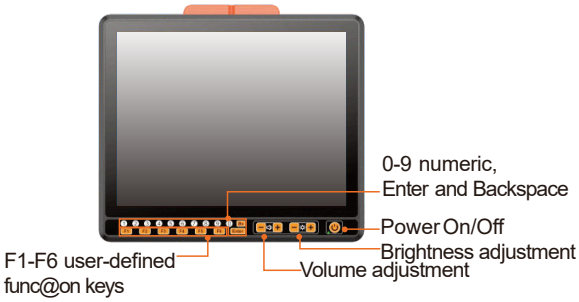

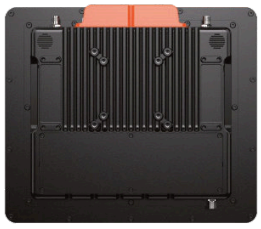

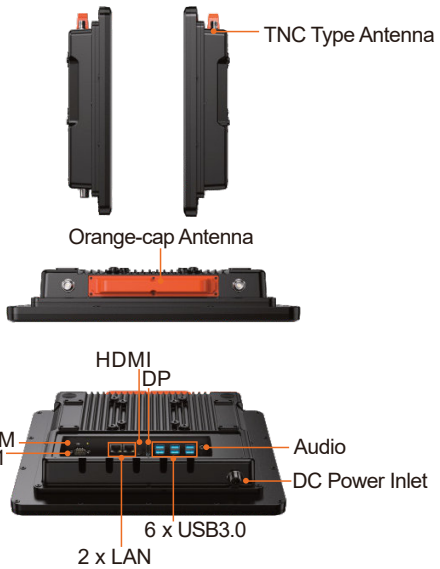

Sistemi Avanzati Elettronici S.r.l.
Via Marconi, 11D - 13836 Cossato (BI)
+39 015 983206 | info@sisav.it | www.sisav.it

VT-979

Specifications

Display	
Size	15 inch (4:3)
Touch Type	Projected capaci@vemul@touch, 5-wire resis@vetouch (Op@onal,by request)
Display Type	TFT LCD
Resolu@on	1024 x 768
Luminance	1000 nits
Contrast Ra@o	1000: 1
View Angles	89 (leH), 89 (right), 89 (up), 89 (down)
Color	16.7M
System	
CPU	Intel® Core i5-1235U, Intel 7, 10-core(2P8E), Max Turbo 4.4GHz
Chipset	Intel® 12th GEN Alder Lake Plalorm
Memory	8GB DDR4-2666 SO-DIMM (up to 32GB)
Storage	256GB M.2 SSD (up to 2TB)
Graphics	Intel® Iris® Xe Graphics
BIOS	AMI UEFI BIOS
Keypad & Keyboard	
Keyboard	Power On/Off Brightness and volume adjustment 0-9 numeric, Enter and Backspace F1-F6 user-defined func@onkeys Power LED indicator
I/O Ports	
USB	6x USB 3.0 (Type A)
Serial	1x RS-232 (COM1, DB9)
Ethernet	2x GbE LAN (RJ45)
Display	1x HDMI (TypeA) 1x DP++ (Type A)
Audio	3.5mm Audio Jack (Mic-in/Line-out)
SIM Card Slot	1x SIM Socket
Antenna	2 to 8x TNC connector for external antenna (Wi-Fi, Bluetooth, WWAN, GPS)
RF Communication	
Wi-Fi	Wi-Fi 6E: 802.11a/b/g/n/ac/ax, 2.4G/5G/6G (op@onal) Wi-Fi 7: 802.11a/b/g/n/ac/ax/be, 2.4G/5G/6G (op@onal)
Cellular	4G, LTE (op@onal) 5G, NSA/SA (op@onal)
Bluetooth	Bluetooth 5.3 (Depend on Wi-Fi 6E, op@onal) Bluetooth 5.4 (Depend on Wi-Fi 7, op@onal)
GNSS	GPS, GLONASS, Galileo, BeiDou (op@onal,Ublox NEO M8N)
Audio	
Speaker	8Ω/2W, dual studio speakers
Power	
DC Input	8 to 36VDC
Power Consump@on	25W (Typ.)
Power Mode	ATX (default), AT
Operating System	
Windows	Windows 11 IoT Enterprise LTSC Windows 10 IoT Enterprise LTSC Windows 11 Pro Windows 10 Pro

Sistemi Avanzati Elettronici S.r.l.
Via Marconi, 11D - 13836 Cossato (BI)
+39 015 983206 | info@sisav.it | www.sisav.it

VT-979

Mechanical	
Dimensions (W x D x H)	355 x 304 x 69 mm (13.97 x 11.96 x 2.71 inches)
Weight (N.W.)	4.8 kg (10.58 lbs)
Moun@ngMode	VESA75 and 100
Material	Die-cas@ngAluminumwith Heavy Duty Metal
Environment	
Opera@ngTemperature	-30~60°C (-22~140°F)
Storage Temperature	-40~70°C (-40~158°F)
Rela@veHumidity	95% @70°C (158°F), non-condensing
Shock	MIL-STD-810H Method 514.8 Procedure I
Vibra@on	MIL-STD-810H Method 516.8 Procedure I
IP Ra@ng	IP66 compliant
Certification	
EMC	CE, FCC

Dimensions

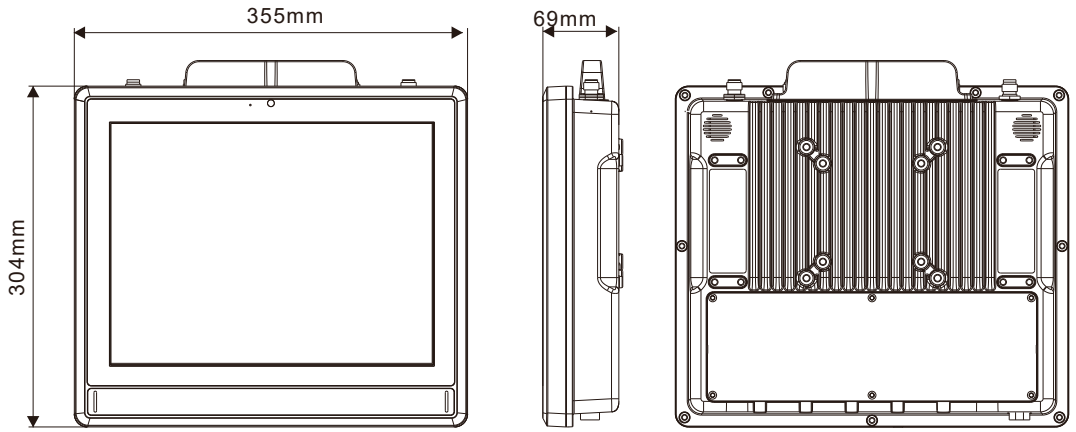

Optional Accessories

Part No.	Description
PWR836D512-M12	8-36VDC Input, 5V/12VDC Output, M12 connector

Ordering Information

Part No.	Description
VT-979-D102A-A01	VT-979 + CTP(1000)+ i5(1235U) + 8GB RAM(HIK) + 256GB M.2(HIK) + WiFi6E(AX210) + Bluetooth(AX210) + 4G(EC20)+ GPS(UG-M80)+ TNC(1)-WiFi_M + TNC(2)-Bluetooth + TNC(3)-4G_M + TNC(8)-GPS;

Sistemi Avanzati Elettronici S.r.l.
Via Marconi, 11D - 13836 Cossato (BI)
+39 015 983206 | info@sisav.it | www.sisav.it